LiGHT SKY



AQUAPEARL-PRO II

OUTDOOR LED MOVING PIXEL BEAM WASH

RGBW · IP66 · CE · RoHS · RDM · DMX 512 · Art-net · S-ACN

FEATURES

- Light source: Original 19X40W RGBW LED, stable performance, long lifespan.
- Versatile: Integrates LED beam and coloring functions, high brightness, long range, wide application.
- Rich and colorful effects: Can be individually controlled, offering a variety of color.
- Rotating front lens creates countless vortex effects, projecting a "kaleidoscopic" effect in the air.
- Front halo can be individually controlled, allowing for dynamic color-changing effects.
- 5°-45° optical zoom, wide zoom range.
- Protection rating: IP66, designed for outdoor use with waterproof, dustproof, and oil-resistant features.

Unit: mm

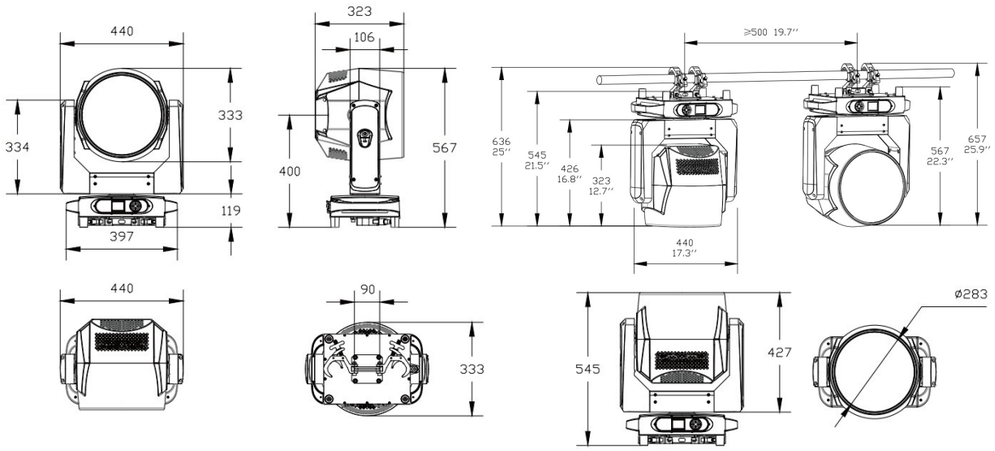

Optics

- Light Source: 19×40W RGBW LED
- Beam Angle: 5° - 25°
- Field Angle: 7° - 45°
- Colour Temperature Output: 2500K - 10000K
- Illuminance : 32,000 lx @ 5m
- Lumen Output: 9700 lm
- Light Source Theory Life Span: 30, 000 h
- LiGHTSKY Colorfy Calibration

Effects

- Color Mixing System: Uniform RGBW color mixing system and rainbow effect
- Zoom System: Linear electronic zoom
- Pixel Control: Each LED can be controlled independently for versatile color effects
- Front Ring: Each LED can be controlled independently to create dynamic color changing effects
- Effect Macros: Includes static and dynamic effect macro functions
- Dimming: Electronic dimming with four dimming curves, four dimming frequencies, and four dimming speeds
- Strobe: 1-25Hz electronic strobe and random strobe effects

Control and Programming

- Control channels: 26CH, 98CH, 28CH, 100CH, 35CH (see channel chart for details)
- Protocols: DMX512, RDM, Art-Net, sACN
- DMX and RDM connectors: 3 pin or 5 pin XLR IN/OUT, Dual RJ45
- Display: LCD screen

Software

- Software Upgrade: DMX signal interface
- Temperature Intelligent Control: Ensures LED lifespan through temperature intelligent control

Pan/Tilt Movement

- Pan: 540°, 8-bit / 16-bit precision
- Tilt: 218° , 8-bit / 16-bit precision
- Automatic reset with error correction
- Tilt Lock

Power and Electrical

- Input Voltage: AC 100-240V 50/60Hz
- Maximum Power: 730W
- Power Factor: 0.977
- Maximum Current of Fixture: 3.32A/220V; 7.3A/100V

Size and Weight

- Product Dimensions: 440mm × 333mm × 567mm
- Net Weight: 25.0 kg
- Carton Dimensions: 515mm × 415mm × 675mm
- Gross Weight: 30.3 kg

Other

- IP Rate: IP66
- Operating Environment: -20℃ ~ 45℃
- Maximum Surface Temperature of Fixture: 65℃

Factory Configuration

- Power Cable: 1 pc (Part No.: C1400050050)
- Signal Cable: 1 pc (Part No.: F0200020087)
- Safety Rope: 2 pcs (Part No.: F0200010010)
- Clamp: 1 set, Compatible with tubes of Ø40-60 mm(Part No.: C0499990040)

Optional Accessories/Packaging

- Flycase Part No.: B0101230001
- Flycase Dimensions (2 in 1): 860mm × 550mm × 760mm
- Flycase Gross Weight(2 in 1): 90.9kg

Illumination Diagram

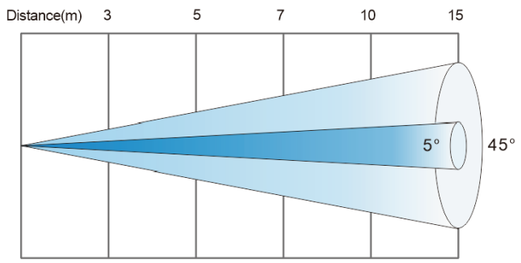

5° Lux R	13750	4950	2526	1238	550
G	27417	9870	5036	2468	1097
B	6069	2185	1115	546	243
W	41322	14876	7590	3719	1653
RGBW	88889	32000	16327	8000	3556
Diameter(m)	0.26	0. 44	0. 61	0. 87	1.31
45° Lux R	817	294	150	74	33
G	1611	580	296	145	64
B	372	134	68	34	15
W	2439	878	448	220	98
RGBW	4894	1762	899	441	196
Diameter(m)	2. 48	4. 14	5.80	8. 28	12. 42

